REVISION				
ASS. REV.	CON. REV.	DESCRIPTON	DATE	APPROVED
T	T	INITIAL RELEASE	2020/07/16	

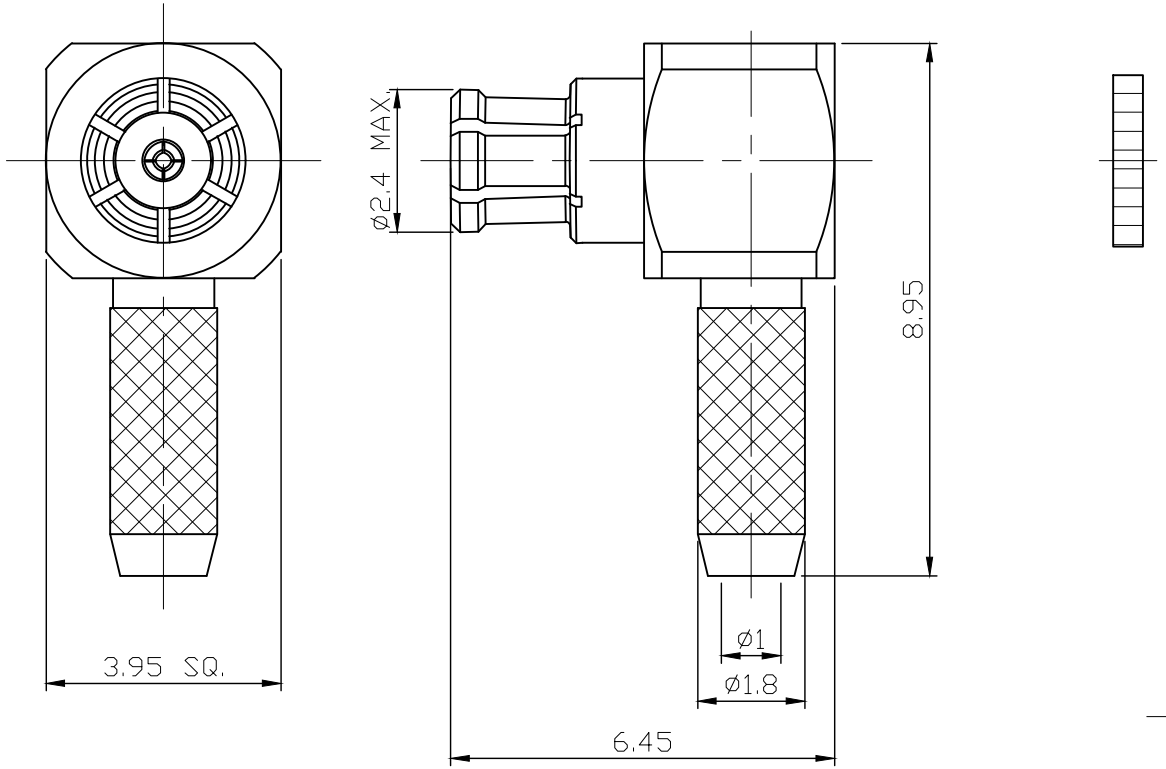

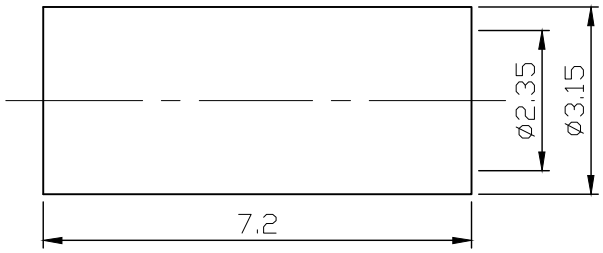

VSWR 1.25 : 1 UP TO 6GHz

NOTES: FINISH (PLATING THICKNESS IN MICRO-INCHES)
1. BERYLLIUM COPPER.
2. BRASS.
3. GOLD PL. 4 MIN. OVER NICKEL-PHOSPHORUS ALLOY PL. 80 MIN. OVER COPPER PL. 20 MIN.

NO.	DESCRIPTION	MATERIAL	FINISH	Q'TY	PART NO.	REV
5	FERRULE	COPPER	NOTE 3	1	SMA3100-0178-7/NM	D
4	COVER	NOTE 2	NOTE 3	1	MMCX3100-9316-7/NM	B
3	CONTACT PIN	NOTE 1	NOTE 3	1	SMPM8300-9047-3NM	T2
2	INSULATOR	TEFLON		1	SMPM8300-9047-2	T
1	BODY	NOTE 1	NOTE 3	1	SMPM8100-9178-1/NM	T

DIMENSION ARE MILLIMETERS
UNLESS OTHERWISE SPECIFIED TOLERANCES (UNIT: MM)
0~0.5 = ±0.03
0.5~5 = ±0.05
5~10 = ±0.07
10~20 = ±0.10
20~30 = ±0.15
30~ = ±0.20

SCALE	ASSEMBLY REV.	CONNECTOR REV.	UNIT
8 / 1	T	T	MM

APPROVED DATE

CHECKED DATE

TESTER DATE

DRAWING DATE

JYE BAO CO., LTD.
TAIPEI TAIWAN

TITLE: SMPM JACK SOLDER R/A

DRAWING NO. SMPM8100-9178