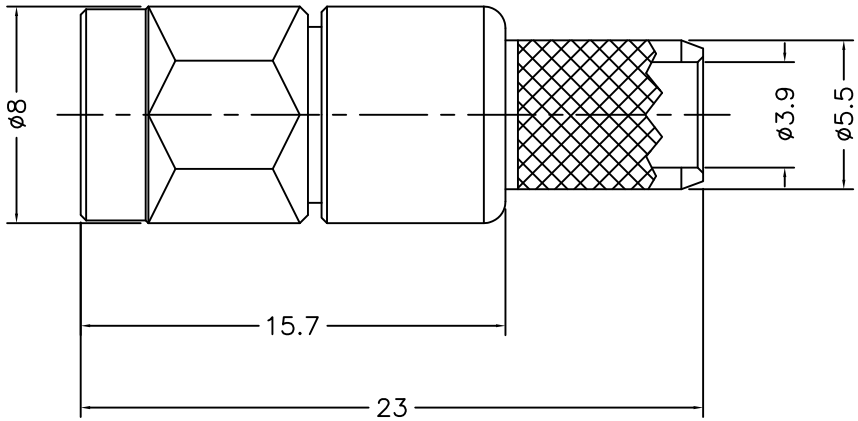

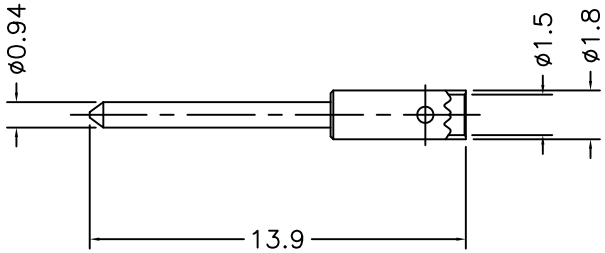

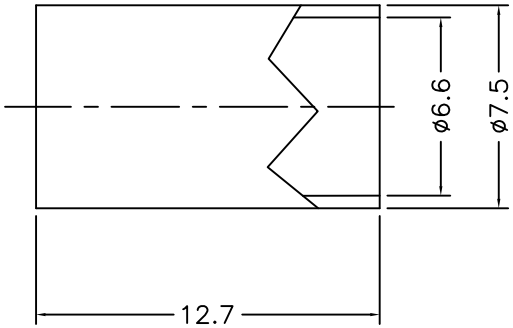

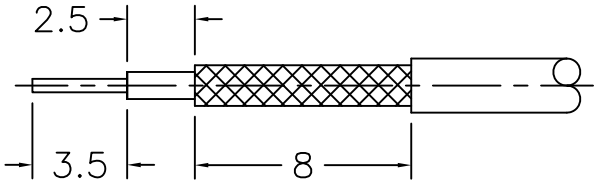

STRIP LENGTHS

NO	DESCRIPTION	MATERIAL	Q'TY	FINISH
8	FERRULE	BRASS	1	GOLD
7	SHELL	BRASS	1	GOLD
6	GASKET	S.L.RUBBER	1	
5	INNER RETAINING RING	STAINLESS	1	GOLD
4	CENTER PIN	BRASS	1	GOLD
3	INSULATOR	TEFLON	1	
2	BODY	BRASS	1	GOLD
1	BODY	BRASS	1	GOLD

製圖 DRAW		電腦檔名 COMPUTER NAME	品名 TITLE	SMA2-5000-LMR240	比例 SCALE	3.5 : 1	修正日期 DATE	