NOTICE OF PROPRIETARY RIGHTS THIS DOCUMENT CONTAINS CONFIDENTIAL TECHNICAL DATA, INCLUDING TRADE SECRETS, PROPRIETARY TO TIMES MICROWAVE SYSTEMS. DISCLOSURE OF THIS DATA IS EXPRESSLY CONDITIONED UPON YOUR ASSENT THAT ITS USE IS LIMITED TO USE WITHIN YOUR COMPANY ONLY. ANY OTHER USE IS STRICTLY PROHIBITED WITHOUT THE PRIOR WRITTEN CONSENT OF TIMES MICROWAVE SYSTEMS.

SYM	REVISION DESCRIPTION	DFTM	DATE	APPD	DATE
A	RELEASED FOR PRODUCTION	D.J.H.	9/12/12	J.D.B.	9/20/12

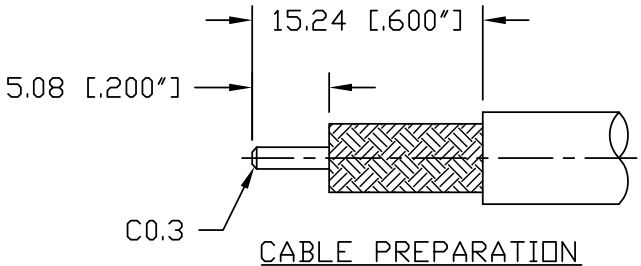

CABLE PREPARATION
USE CST-240 (3192-070)
STRAIGHT SETTING

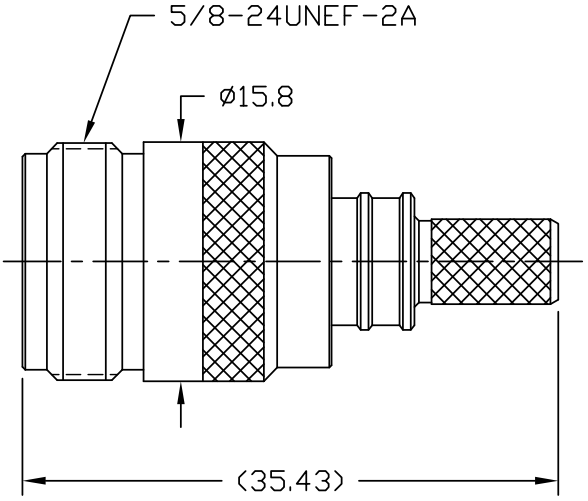

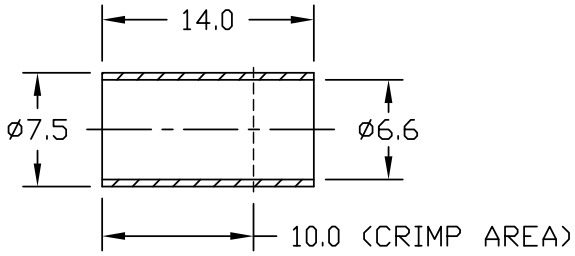

NOTE:
1. CRIMP THE FERRULE TO .255" HEX.

ALL PARTS SATISFIED ROHS REQUIREMENTS

MATERIALS AND PLATING		UNIT: MICRO-INCHES
BODY	BRASS C3604	ALBALOY 80u"/COPPER
CONTACT PIN	PHOSPHOR BRONZE C54400	GOLD 50u"/NICKEL/COPPER
INSULATOR	TEFLON MIL-P-19468	NATURAL
FERRULE	BRASS	ALBALOY 80u"/COPPER

ELECTRICAL CHARACTERISTICS	
Impedance	50 Ω
Voltage rating	750V(rms)
Frequency range	0~6GHz
Dielectric withstanding voltage	1000V
Contact resistance	Center contact≤1.5mΩ
	Outer contact≤1mΩ
Insulation resistance	≥5000MΩ
Insertion loss	According to the cable
RF- leakage	N/A
VSWR	1.3MAX(0-6GHz)

MECHANICAL CHARACTERISTICS	
Force to engage and disengage	6 lbs MAX.
Center contact retention force	6 lbs MIN.
Coupling torque	N/A
Coupling nut retention force	N/A
Durability	≥ 500 cycles

ENVIRONMENTAL CHARACTERISTICS	
Temperature range	-55°C- +155°C
Thermal Shock	MIL-STD-202, Method 107, Cond. B
Vibration	MIL-STD-202, Method 204, Cond. B
Shock	MIL-STD-202, Method 213, Cond. I
Climatic class	IEC 60068 65/165/21

MATL:

USED ON: 0-3

UNLESS OTHERWISE SPECIFIED
ALL DIMENSIONS ARE IN mm
MACHINED SURFACES FINISH 1.6 RMS MAX.
REMOVE ALL BURRS 0.15X45° MAX. BREAK
MACHINE CORNERS 0.15X45° MAX. FILLET R.
TOLERANCES ON DECIMALS
.X ± 0.3 .XX ± 0.2
ANGLES ± 1/2° FRACTIONS ± N/A

DFTM. D. J. H.
DATE 9/12/12
CHKD. J. D. B.
DATE 9/20/12
APPD. J. D. B.
DATE 9/20/12

TIMES MICROWAVE SYSTEMS

EZ-240-NF-X

N FEMALE FOR LMR-240 CABLE
EZ/CRIMP/NO BRAID TRIM

SCALE: N/A DWG. SIZE A DO NOT SCALE DRAWING CODE IDENT 68999 SHT. 1 of 1 SD3190-2795 REV. A